INSTALLATION MANUAL,

USE AND AMINTENANCE

AURORA

INTENDA S.r.l.
Via V. Pareto, 3
37045 S. Pietro di Legnago (VR)
Tel +39 0442 601031 – 600270
Fax +39 0442 25164
http://www.intenda.it - e-mail: info@intenda.it.

TABLE OF CONTENTS

1. GENERAL INFORMATION 3
   1.1. Introduction 3
   1.2. General precautions regarding the use of the product 4
   1.3. Structure of the manual 4
   1.4 Product identification 5
   1.4. Warranty 5
2. BOX DESCRIPTION AND TECHNICAL SHEET 6
   2.1. General description 6
   2.2. Components 7
   2.3. Fabric's charateristics 10
3. INSTALLATION 11
   3.1. Handling and transport 11
   3.2. Place and requirements for the installation 11
   3.3. Installation 11
      3.3.1. Package opening 11
      3.3.2 Squared holding devices placement 12
      3.3.3 Box installation 12
      3.3.4 Bracing system 13
      3.3.5 Snails opening 14
4. GENERAL SAFETY PRINCIPLES 15
5. BOX USAGE 16
6. CHECKS AND MANTAINANCE 16
   6.1. ORDINARY MAINTENANCE 16
7. DISASSEMBLY 17

1. GENERAL INFORMATION

1.1. Introduction

This manual is an integral part of the product; it is addressed to the installer and to the final user of the box, and enables a correct installation and use. For this reason it must be hold with the box until proper disposal.
In this manual you will find the instructions to:

- correctly install the box
- understand the functions of the box and of the whole thereof
- correctly do the box scheduled maintenance processes
- take care of the basic safety rules

ATTENTION: the installer and the final user must read the whole manual in each part of it. Keep this manual in a safe and accessible place.
Before using the box, please read carefully the technical information contained in this manual and follow them strictly.

The manual must be kept with care, disseminated and made available to all interested persons. In harmony with the overall design of the structure, the manual was created in full compliance with the directives of the European Community.
This manual contains the main information indicated in the index, it is an integral part of the Box and must be kept with care until the final dismantling of the structure itself in order to allow reference for future updates. In the event of damage that makes the copy of the manual in its possession unusable, the user can request a copy from Intenda S.r.l., specifying the type of structure, the serial number or order shown on the nameplate of the structure itself.
No responsibility is assumed for translations into other languages which do not conform to the original meaning.
This manual reflects the state of the product at the time of supply and cannot be considered inadequate only because it is subsequently updated on the basis of new studies or experiences. You will receive, in the future, revisions or updates to integrate and consider. Intenda S.r.l. reserves the right to update production and manuals without the obligation to update the production and previous manuals and without the obligation to inform users of the equipment previously supplied. The notification of proposals for updating the manual and / or the machines are in any case to be considered a courtesy. The customer assistance service is however available to provide, upon request, information on the updates that Intenda S.r.l. made to the products.
This manual has been created in order to provide the user with a general knowledge of the product and the maintenance instructions deemed necessary for its proper functioning. Before proceeding with functional operations, maintenance and repairs, carefully read the Manual. It contains all the information necessary for the correct use of the product and to avoid accidents. The control and maintenance frequencies prescribed by the manual are always intended as the minimum necessary to ensure the efficiency, safety and durability of the product in normal working conditions. The surveillance must in any case be constant and prompt action must be taken in the event of anomalies.

WARNING: Any modification or tampering, not authorized by the manufacturer, to the product and to the safety or structural systems, cancels any responsibility of the manufacturer with regard to CE conformity.

1.2. General precautions regarding the use of the product

These indications are part of the normal behavior that workers must have towards the product and therefore in the design and construction of the product, the manufacturer considered them known to the tenant. It is the user's task to inform (by delivering this manual) and train the employees (users and maintenance technicians) so that these indications are brought to the attention of the staff who will work with the structure.

- Always use anti-cut gloves when closing or opening the structure, during adjustments or maintenance (described in the following chapters). When finished, wash your hands with soap and water.
- Immediately clean any accidental contacts of corrosive products that come into contact with the structure to avoid rapid deterioration.
- Do not allow unauthorized personnel to work with the equipment.
- Before using the equipment, make sure that any dangerous to safety conditions have been properly eliminated.
- Make sure that all the guards and other protections as well as the structural fixings are in place and that all the safety devices are present and efficient.
- Make sure that there are no foreign objects in the sliding area of the structure.
- Individual protection devices must be used such as:
    - o Safety clothing
    - o Safety shoes
    - o Cut resistant gloves

The protection systems must be used in the following phases:
- Structure maintenance operations (cleaning, checking or adjustment)
- Operating operations (closing and opening)

1.3. Structure of the manual

This manual consists of eight parts which contain:

• 1. GENERAL RULES AND WARNINGS, useful premises for using and understanding the manual;
• 2. GENERAL INFORMATION, useful premises for identifying the box;
• 3. TECHNICAL DATA, information on the characteristics of the box;
• 4. OPERATING INSTRUCTIONS, interface for the safe use of the box;
• 5. MAINTENANCE, advices and recommendations;
• 6. DEMOLITION AND DISMANTLING OF THE STRUCTURE, instructions and recommendations;
• 7. SPARE PARTS, detailed list of the parts that make up the box.

The user manual makes use of the following typographical conventions:

Symbol		*Indicates*
Note		Notes contain important information highlighted outside the text. Pay close attention.
WARNING		Warning messages contain procedures, indicated in the manual, that failure to observe can result in equipment damage.
ATTENTION		The ATTENTION messages indicate the particular procedures whose failure to comply can damage the operator.

1.4 Product identification

The physical identification record is the silk-screened and stamped plate which contains the details to be cited, in case of need, to the company Intenda S.r.l . This plate is the only one recognized by the manufacturer as a means of product identification. For no reason the data shown on the product can be altered. A reproduction of the plate is shown in the following drawing.

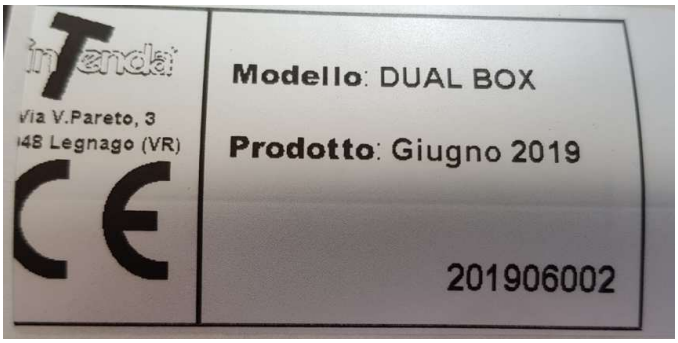

1.4. Warranty

Intenda's products are guaranteed as by law, with effect from the date stated on the invoice.

During this period INTENDA S.r.l. will remove in an appropriate time all vices and defects of the materials and/or of the building process, only if the box:

- has been installed by qualified workers

- has been used correctly, following the conduct and maintenance indications contained in this manual
- has not been subjected to natural disasters

To remove the defects found out during the warranty time:
- the costs of working time and transport are at the expense of the dealer
- the costs of spare parts are at the expense of INTENDA S.r.l.

Warranty is meant to be ex works Legnago (VR). All the tools and optional parts eventually supplied by the dealer are not subject to the warranty.
In the box building process INTENDA S.r.l. uses materials and mechanisms of suitable type, state and quality, at its own discretion; even after the receipt of the order, INTENDA S.r.l. can make substantial changes or appropriate improvements at its own discretion.
Slight colour differences, folds or “partridge’s eyes” in the PVC clothes should not be considered defects, but features of the article.

2. BOX DESCRIPTION AND TECHNICAL SHEET

2.1. General description

The box must be used only as an ordinary protection cover, for purely temporary use. In case of bad weather conditions (wind, snow), the box must be removed. Given that the box can not be fixed to the ground - but only bound to it - its use in these conditions can cause damages to people and things.
It is particularly important for safety not to hang or apply any type of load at the structure or at the top cover of the box.
In particular, children must not handle the snails. The failure to respect the conditions of use and warnings immediately voids the warranty.

AURORA

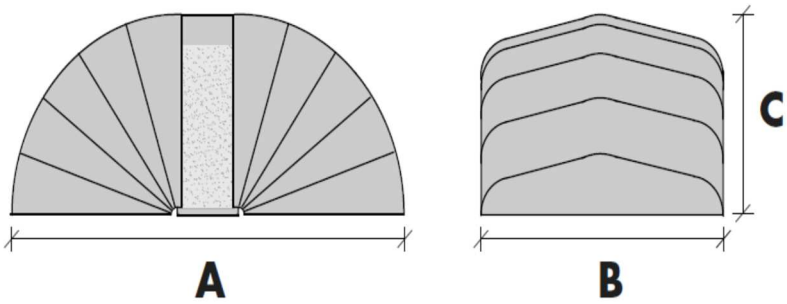

A (cm): 470/540/610

B (cm): 250

C (cm): 200

2.2. Components

N.	DESCRIPTION
1	ALUMINIUM PROFILE MM 45X15
2	ALUMINIUM PROFILE (gables)
3	SQUARED HOLDING DEVICE
4	SQUARED HOLDING DEVICE CAP
5	ANODIZED ALUMINIUM 120x60 FOOT
6	TOP COVER RAYTENT
7	ALUMINIUM LACQUERED RAL 9010 PLATE (crosses)
8	ALUMINIUM LACQUERED RAL 9010 PLATE (tension bars)
9	NYLON ROPE DIAM. MM 5
10	STRING FASTENER HANDLE
11	HINGE FASTENING RIVET
12	TENTMESH LATERAL COVER
13	FOOT WITH FINAL HINGE
14	FOOT WITH CENTRAL HINGE
15	FOOT WITH HINGE FOR HEAD-FASTENING PLATE

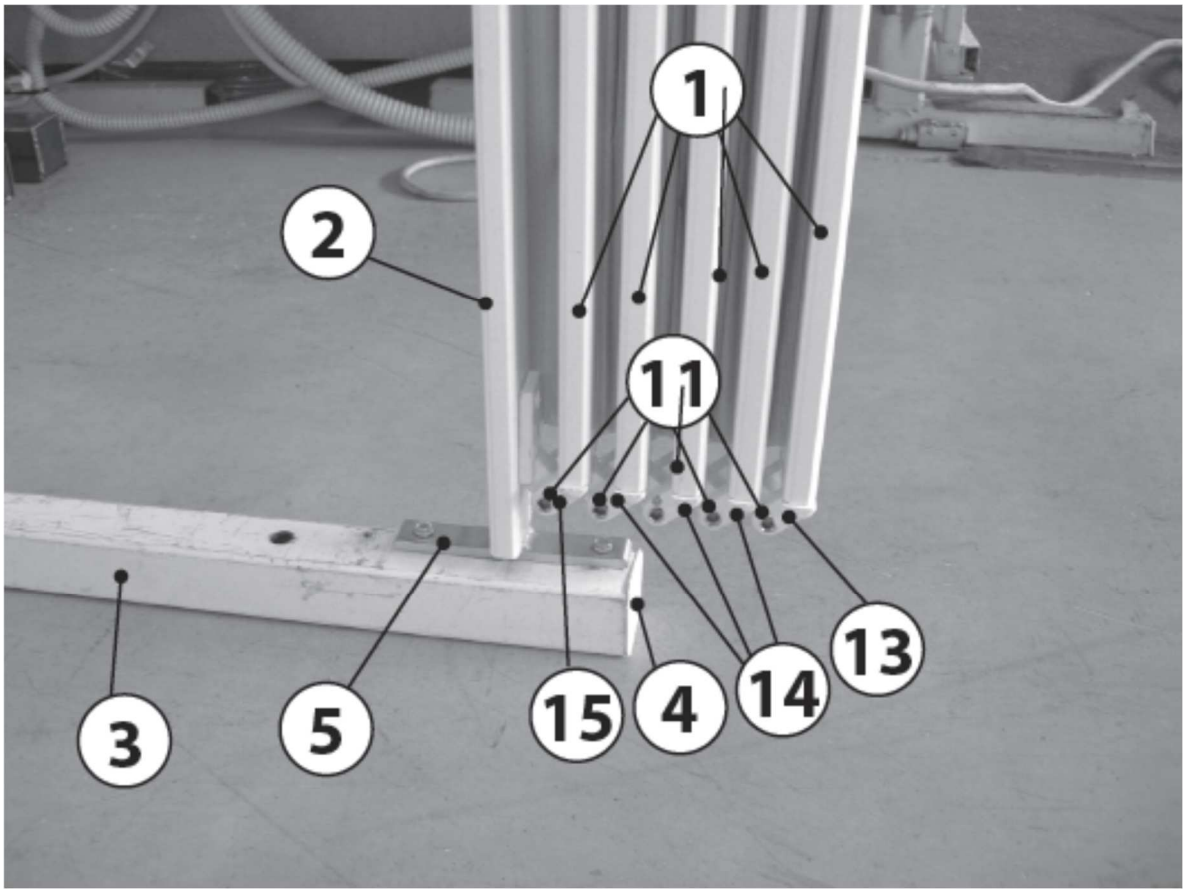
1
2
11
3
5
15
4
14
13

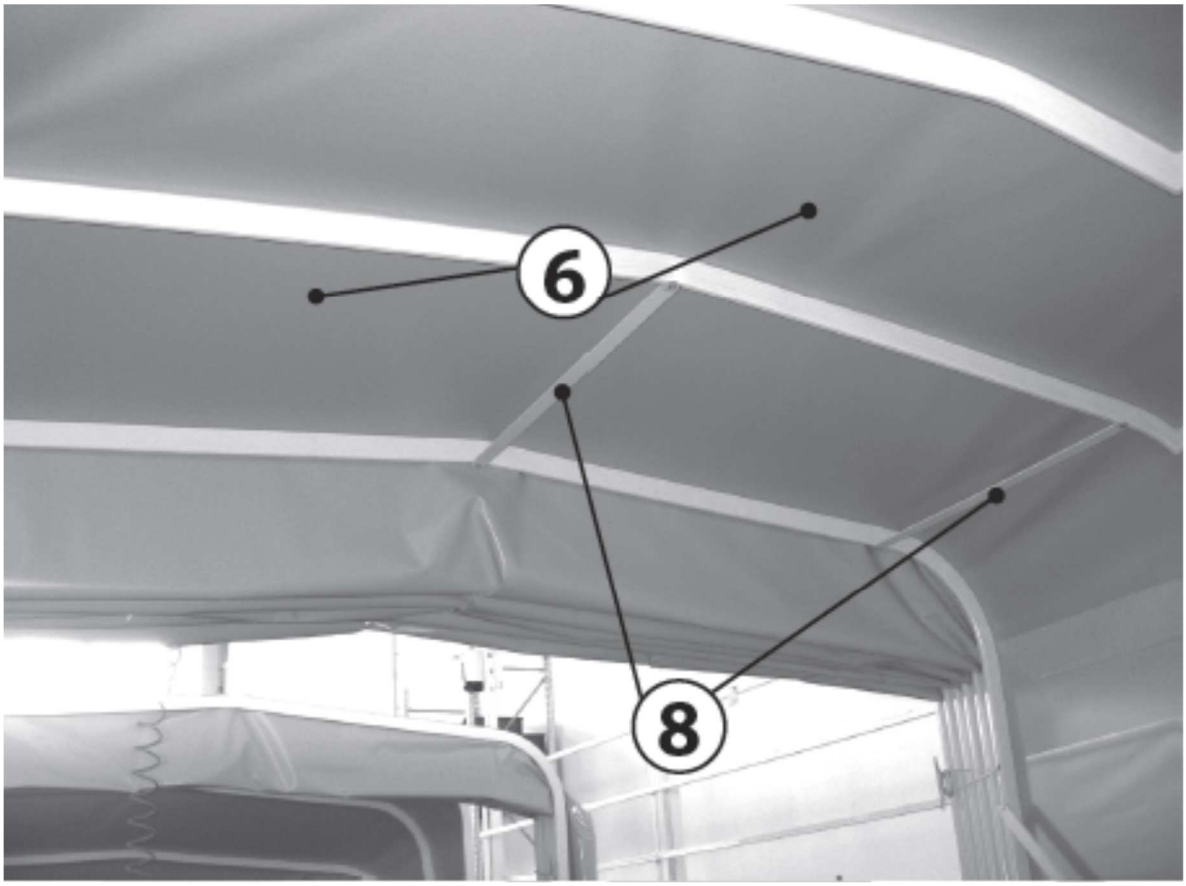
6
8

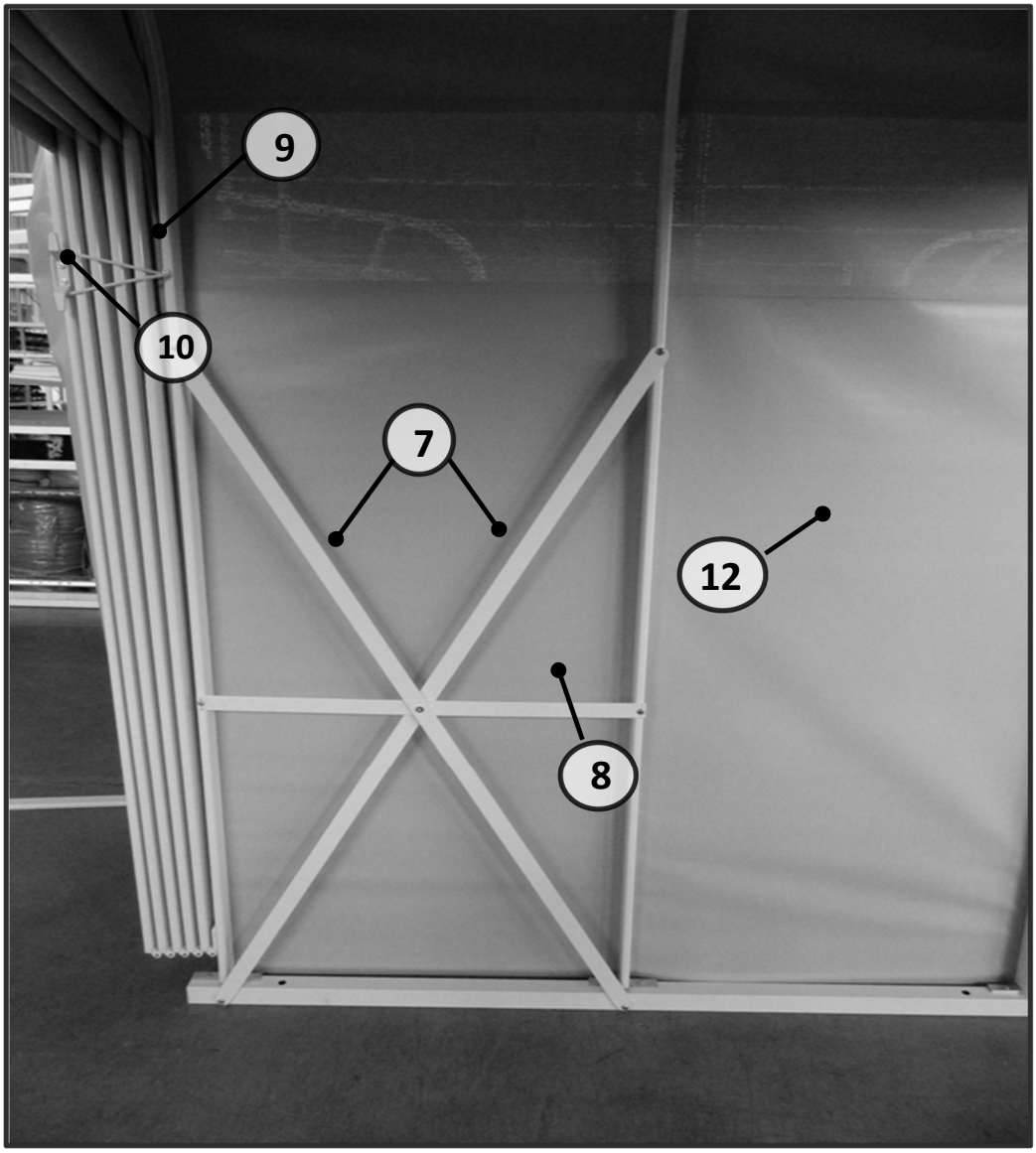
9
10
7
12
8

2.3. Fabric's charateristics

RAYTENT

Acrilic 100% dyed content > 50% – recycled fibre

Yarn	PC 20/2 Ne – 20/2 Ne
Construction	Warp: 30 fili/cm Weft: 15 fili/cm
Fabric's weight	Ca 290 gr/m^2
Tensile strenght **(ISO 13934-1)**	Warp: Ca 120 DaN/5 cm Weft: Ca 70 DaN/5 cm
Tearing resistance **(ISO 13937-1)**	Warp: Ca 3 DaN Weft: Ca 2 DaN
UV colour's solidity (ISO 105 B02)	Level: 8/8
Colour solidity to the elements **(ISO 105 B04)**	Level: 8/8
Finishing	Water-repellent

3. INSTALLATION

ATTENTION: Intenda S.r.l. recommends a preventive investigation by a competent technician, for a detailed analysis of the urban planning regulations in force in the installation area of the box. The manufacturer assumes no responsibility for installations in areas (floors) not suitable for supporting the static and dynamic loads of the structure or in areas where the stresses deriving from atmospheric phenomena can cause permanent damage to the structure. The manufacturer assumes no responsibility for installations in areas regulated by specific urban planning regulations.

3.1. Handling and transport

The box installation should only be done by qualified staff.
The products must be unloaded through appropriate lifting equipment, which must be used only by authorized staff.
If the unloading operation is made by hand, it is important to consider that the weight limit that each person can handle is 25 Kg; moreover, the operators should be equipped with gloves and safety shoes.

3.2. Place and requirements for the installation

Before the arrival of the installers the user must arrange:

- any permits required by local regulations
- appropriate ground

3.3. Installation

Before starting the installation, if electrical equipment utilization is needed:

- make sure you do not work in wet areas
- use only intact extension cords, according to the place of use
- use shoes with rubber soles

ATTENTION: it is necessary for the operators to use appropriate personal protective equipment such as safety shoes and gloves, in order to avoid injuries provoqued by the fall of the packaging or of components that it contains, perforation and cutting due to cutting or hanging parts.

3.3.1. Package opening

Packaging must be opened only with scissors with rounded tips, using the best care not to cut the cloth of the article (Photo 1).

P
H
O
T
O

1

NOTE: The packaging material disposal is at user's charge, who will perform it in accordance with existing environmental norms.

3.3.2 Squared holding devices placement

The squared holding devices must be anchored to the ground (previously prepared by the customer) in a parallel position (photo 2).

P
H
O
T
O

2

NOTE: The fixation to the ground must be done according to the type of ground and the localization of the box. Use 12 mm dowel anchors

3.3.3 Box installation

The central part of the box must be opened paying attention not to open the snail parts (let the strings fastened to the handles).

The lateral uprights must be fixed in the feet contained in the squared holding devices (photo 3 and 4).

PHOTO 3

PHOTO 4

3.3.4 Bracing system

The roof bars must be screwed in the holes prepared by INTENDA S.r.l (photo 5 and 6).

PHOTO 5

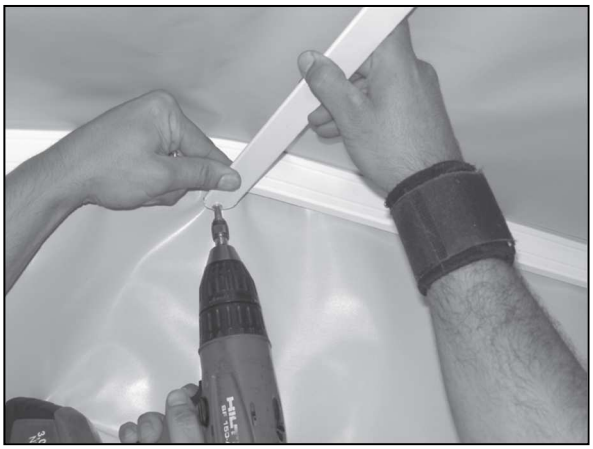

PHOTO 6

The lateral crosses must be positioned (photo 7 and 8).

PHOTO 7

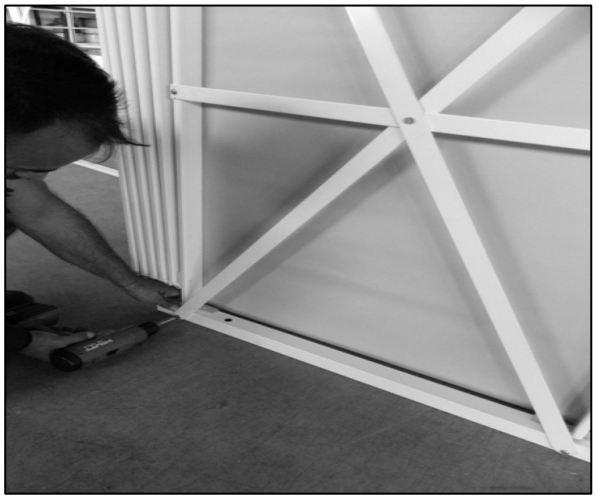

PHOTO 8

Insert the flat bars provided into the appropriate pockets (on both sides of the box) and then secure them with their screws in the holes (photos 9, 10, 11);

FOTO 9

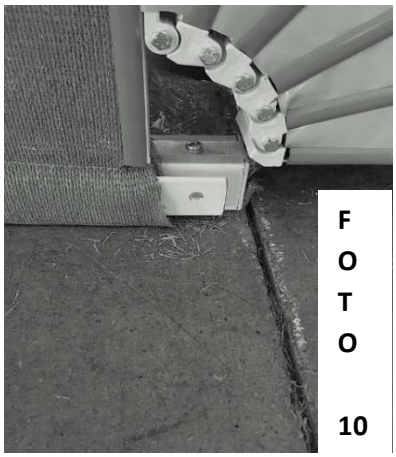

FOTO 10

FOTO 11

3.3.5 Snails opening

Open the snails as shown in photos 12 and 13.

PHOTO 12

PHOTO 13

At this point, the structure can be fixed to the ground by means of dowels in the holes already provided on the square bars. N.B.: When fastening, ensure that the vertical profiles are perfectly straight, perpendicular to the top profile.

ATTENTION: other installation ways which are not contained in this manual are not allowed, if not previously authorized by INTENDA S.r.l.

ATTENTION: the box must be fixed to the ground or to a wall. The installer must verify the ground type and conditions and choose the appropriate anchoring system, also considering the typical meteorological conditions of that particular place (strong wind, …).

4. GENERAL SAFETY PRINCIPLES

ATTENTION

It is recommended to follow the safety requirements indicated on the structure and into the installation manual. Do not remove or modify the safety devices. The utilization of the product should be in accordance with the producer indications.

ATTENTION

The safety indications do not refer only to new products, but also to already used products.

WARNING

It is strictly recommended to follow the safety principles descripted in this installation manual, in order to prevent faults in the functioning of the product.

NOTE

It is strictly recommended to follow the maintenance and inspection programs as described in this manual.

It is useful to explain the correct meaning of some terms used it this manual:

"Dangerous areas": any part of the box which can damage a person during handling of the structure.

"Exposed person": any person who stands entirely or partially near a dangerous area of the box.

"Operator": the person in charge of the handle and maintenance of the box.

The box should be only used by trained staff. These people should know the features of the product, and should be informed about the indications contained in this manual.

INSTALLATION AREA

The structure can be opened and closed by manual handling, by pushing it to the back. The handling operations should be always done on the ground. Any folding operation from a raised position it is strictly forbidden. The closing movement of the box must be performed by a single operator. Handling of thestructure by more than one operator is not permitted.

5. BOX USAGE

Before using the box it is necessary to check that the assembly and anchoring operations have been carried out correctly.
The snails of the box can be opened and closed simply by raising or lowering them. Special ropes can be used to keep them open. Since the fastening systems of the snails are only temporary, the latter must be used only for the time necessary to enter or exit the box.

ATTENTION : the most frequent danger when using the box is given by the snails falling, which could cause damage to people and / or things; it is therefore essential that the opening and closing operations are not carried out by children

6. CHECKS AND MANTAINANCE

Periodically it is necessary to check the general condition of the supporting structure, of the connections between the components, of the hinges and of the fabric. In the event that tears or holes are found in the tarpaulins, injuries or cracks in the metal components, it is necessary to contact the authorized dealer.
The state of the fastening systems (cords) of the snails must be periodically checked. In case of cracks or cuts they must be promptly replaced.

The cloth can be washed with neutral detergents and then rinsed only with water. After cleaning, the fabric must be allowed to dry before being folded in order to avoid mold.

The control and maintenance frequencies prescribed by the manual are always intended as the minimum necessary to ensure the efficiency, safety and durability of the product in normal working conditions. Surveillance must in any case be constant and prompt action must be taken in the event of anomalies.

All routine maintenance, checks and general lubrication must be carried out with the structure disassembled.

WARNING: Any modification or tampering, not authorized by the manufacturer, invalidates any responsibility of the manufacturer with regard to product conformity.

It is therefore advisable to keep the Box constantly under control, carrying out the checks described below, promptly and adequately providing for any anomalies, abnormal wear or breakages.

6.1. ORDINARY MAINTENANCE

CAUTION

The intervention times listed are provided for information only and refer to normal conditions of use. The conditions may in fact undergo variations in relation to the type of service, the frequency

of use and the more or less dusty environment in which the product operates. In case of heavy use, maintenance interventions must be adequately increased.

CAUTION

It is recommended to always use lubricants of the same type used previously. The greasing points must be carefully cleaned with compressed air before lubricating, in order to prevent mud, dust or foreign bodies from mixing with the lubricant itself.

Carefully carry out the following operations:

EVERYDAY:

Before starting to operate, visually check the integrity of the product, paying particular attention to any breakages in the structure. Check the integrity of the cover sheet.

EVERY SIX MONTHS:

Check the state of conservation of the structures: if necessary, replace worn or damaged parts. Always use original spare parts. Check the tightness of all the bolts present in the structure. Check the ground fastening of the structure

EVERY 24 MONTHS:

General control of the manufacturer with verification report of the elements most stressed.

7. DISASSEMBLY

Disassembly takes place in reverse of assembly.

Any disposal of the Box must be carried out in accordance with current environmental legislation.

WARNING

Comply with the laws in force in the country where the structure is used, regarding the use and disposal of the products used for cleaning and maintaining of the box, respecting the requirements recommended by the manufacturer of these products.

A life span of the product is estimated for a period of 10 years. After this time, please refer to a check by the competent technician of Intenda S.r.l. to analyze a residual life span.