INSTALLATION, USE AND MAINTENANCE

COPRIVASCA

INTENDA S.r.l.
Via V. Pareto, 3
37045 S. Pietro di Legnago (VR)
Tel +39 0442 601031 – 600270
Fax +39 0442 25164
http://www.intenda.it - e-mail: info@intenda.it

TABLE OF CONTENTS

TABLE OF CONTENTS 2

1. GENERAL INFORMATION 4

1.1. Introduction 4

1.2 General precautions regarding the use of the product 5

1.3 Manual structure 5

1.4 Product identification 6

1.5 Warranty 7

2. BOX DESCRIPTION AND TECHNICAL SHEETS 8

2.1. General description 8

2.2 Components 8

2.3 Fabric's characteristics 9

3. INSTALLATION 9

3.1 Handling and transport 10

3.2. Place and requirements for the installation 10

3.3. Installation 10

3.3.1. Package opening 10

3.3.2. Installation of the box 11

4. General safety principles 18

5. BOX UTILIZATION 19

5.1 Box mobile 19

6. Checks and maintenance 21

6.1. Ordinary Maintenance 22

7. Disassembly 22

1. GENERAL INFORMATION

1.1. Introduction

This manual is an integral part of the product; it is addressed to the installer and to the final user of the box, and enables a correct installation and use. For this reason, it must be hold with the box until proper disposal.
In this manual you will find the instructions to:

- correctly install the box
- understand the functions of the box and of the whole thereof
- correctly do the box scheduled maintenance processes
- take care of the basic safety rules

ATTENTION: the installer and the final user must read the whole manual in each part of it. Keep this manual in a safe and accessible place.
Before using the box, please read carefully the technical information contained in this manual and follow them strictly.

The manual must be kept with care, disseminated and made available to all interested persons. In harmony with the overall design of the structure, the manual was created in full compliance with the directives of the European Community.
This manual contains the main information indicated in the index, it is an integral part of the Box and must be kept with care until the final dismantling of the structure itself in order to allow reference for future updates. In the event of damage that makes the copy of the manual in its possession unusable, the user can request a copy from Intenda S.r.l., specifying the type of structure, the serial number or order shown on the nameplate of the structure itself.
No responsibility is assumed for translations into other languages which do not conform to the original meaning.
This manual reflects the state of the product at the time of supply and cannot be considered inadequate only because it is subsequently updated on the basis of new studies or experiences. You will receive, in the future, revisions or updates to integrate and consider.
Intenda S.r.l. reserves the right to update production and manuals without the obligation to update the production and previous manuals and without the obligation to inform users of the equipment previously supplied. The notification of proposals for updating the manual and / or the machines are in any case to be considered a courtesy. The customer assistance service is however available to provide, upon request, information on the updates that Intenda S.r.l. made to the products.
This manual has been created in order to provide the user with a general knowledge of the product and the maintenance instructions deemed necessary for its proper functioning.
Before proceeding with functional operations, maintenance and repairs, carefully read the Manual. It contains all the information necessary for the correct use of the product and to avoid accidents. The control and maintenance frequencies prescribed by the manual are always intended as the minimum necessary to ensure the efficiency, safety and durability of the product in normal working conditions. The surveillance must in any case be constant and prompt action must be taken in the event of anomalies.

WARNING: Any modification or tampering, not authorized by the manufacturer, to the product and to the safety or structural systems, cancels any responsibility of the manufacturer with regard to CE conformity.

1.2 General precautions regarding the use of the product

These indications are part of the normal behavior that workers must have towards the product and therefore in the design and construction of the product, the manufacturer considered them known to the tenant. It is the user's task to inform (by delivering this manual) and train the employees (users and maintenance technicians) so that these indications are brought to the attention of the staff who will work with the structure.

- Always use anti-cut gloves when closing or opening the structure, during adjustments or maintenance (described in the following chapters). When finished, wash your hands with soap and water.
- Immediately clean any accidental contacts of corrosive products that come into contact with the structure to avoid rapid deterioration.
- Do not allow unauthorized personnel to work with the equipment.
- Before using the equipment, make sure that any dangerous to safety conditions have been properly eliminated.
- Make sure that all the guards and other protections as well as the structural fixings are in place and that all the safety devices are present and efficient.
- Make sure that there are no foreign objects in the sliding area of the structure.
- Individual protection devices must be used such as:
    - o Safety clothing
    - o Safety shoes
    - o Cut resistant gloves

The protection systems must be used in the following phases:
- Structure maintenance operations (cleaning, checking or adjustment)
- Operating operations (closing and opening)

1.3 Manual structure

This manual consists of eight parts which contain:

1. **GENERAL RULES AND WARNINGS**, useful premises for using and understanding the manual;

2. **GENERAL INFORMATION**, useful premises for identifying the box;

3. **TECHNICAL DATA**, information on the characteristics of the box;

4. **OPERATING INSTRUCTIONS**, interface for the safe use of the box;

5. **MAINTENANCE**, advices and recommendations;

5. **DEMOLITION AND DISMANTLING OF THE STRUCTURE**, instructions and recommendations;

7. **SPARE PARTS**, detailed list of the parts that make up the box.

The user manual makes use of the following typographical conventions:

Symbol		***Indicates***
Note		Notes contain important information highlighted outside the text. Pay close attention.
WARNING		Warning messages contain procedures, indicated in the manual, that failure to observe can result in equipment damage.
ATTENTION	ATTENTION	The ATTENTION messages indicate the particular procedures whose failure to comply can damage the operator.

1.4 Product identification

The physical identification record is the silk-screened and stamped plate which contains the details to be cited, in case of need, to the company Intenda S.r.l . This plate is the only one recognized by the manufacturer as a means of product identification. For no reason the data shown on the product can be altered. A reproduction of the plate is shown in the following drawing.

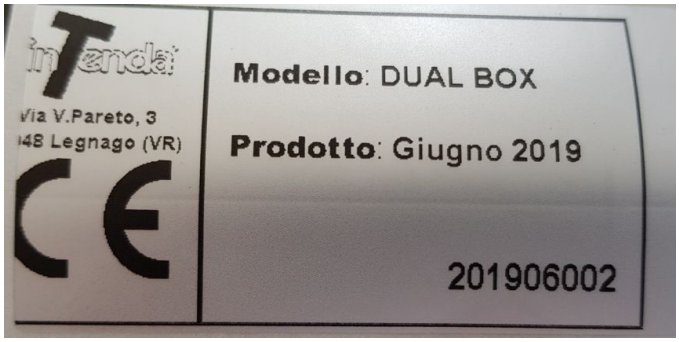

1.5 Warranty

Intenda's products are guaranteed as by law, with effect from the date stated on the invoice.

During this period INTENDA S.r.l. will remove in an appropriate time all vices and defects of the materials and/or of the building process, only if the box:

- has been installed by qualified workers
- has been used correctly, following the conduct and maintenance indications contained in this manual
- has not been subjected to natural disasters

To remove the defects found out during the warranty time:

- the costs of working time and transport are at the expense of the dealer
- the costs of spare parts are at the expense of INTENDA S.r.l.

Warranty is meant to be ex works Legnago (VR). All the tools and optional parts eventually supplied by the dealer are not subject to the warranty.
In the box building process INTENDA S.r.l. uses materials and mechanisms of suitable type, state and quality, at its own discretion; even after the receipt of the order, INTENDA S.r.l. can make substantial changes or appropriate improvements at its own discretion.
Slight colour differences, folds or "partridge's eyes" in the PVC clothes should not be considered defects, but features of the article.

2. BOX DESCRIPTION AND TECHNICAL SHEETS

2.1. General description

The box must be used only as an ordinary protection cover, for purely temporary use. In case of bad weather conditions (wind, snow), the box must be removed. Given that the box can not be fixed to the ground - but only bound to it - its use in these conditions can cause damages to people and things.
It is particularly important for safety not to hang or apply any type of load at the structure or at the top cover of the box.
In particular, children must not handle the structure. The failure to respect the conditions of use and warnings immediately voids the warranty.

2.2 Components

<u>ATTENTION</u>: The Coprivasca must be installed at a minimum height of 240 cm from the ground.

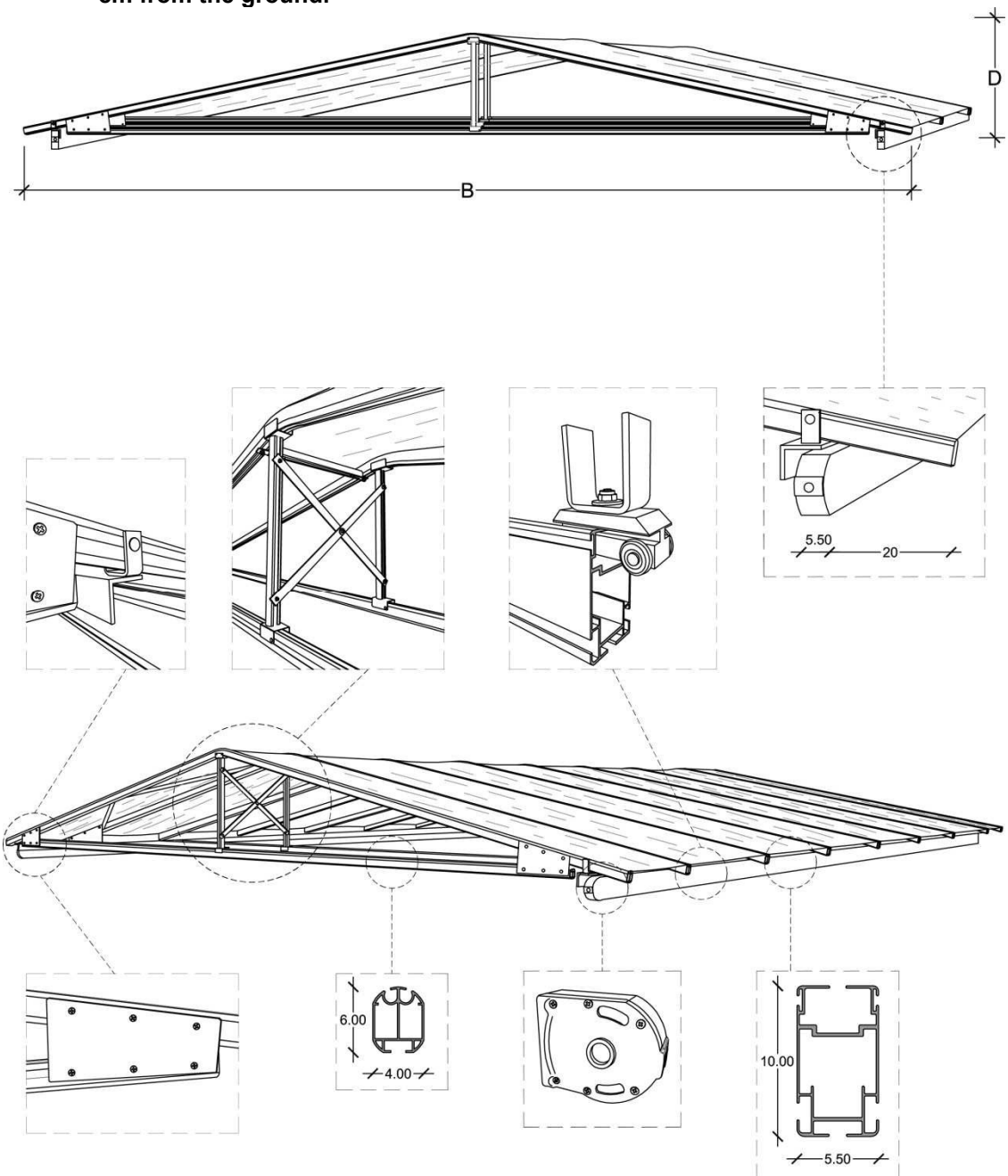

2.3 Fabric's characteristics

PRECONTRAINT 705

Fabric	*Warp:* 100% PES/1100 Dtex HT *Weft:* 100% PES/1100 Dtex HT
Fabrics Weight	Ca 670 gr/m^2
Finishing	lacquered gleaming on both sides
Breaking strength **(EN ISO 1421)**	*Warp:* ca. 250 DaN/5 cm *Weft:* ca. 250 DaN/5 cm
Tear Strength **(DIN 53363)**	*Warp:* ca. 25 DaN *Weft:* ca. 25 DaN
Grip (ISO 2411)	10 DaN/5 cm
Temperature Resistance	+70° C /-30° C

3. INSTALLATION

ATTENTION: Intenda S.r.l. recommends a preventive investigation by a competent technician, for a detailed analysis of the urban planning regulations in force in the installation area of the box. The manufacturer assumes no responsibility for installations in areas (floors) not suitable for supporting the static and dynamic loads of the structure or in areas where the stresses deriving from atmospheric phenomena can cause permanent damage to the structure. The manufacturer assumes no responsibility for installations in areas regulated by specific urban planning regulations.

3.1 Handling and transport

The box installation should only be done by qualified staff.
The products must be unloaded through appropriate lifting equipment, which must be used only by authorized staff. If the unloading operation is made by hand, it is important to consider that the weight limit that each male person can handle is 25 Kg; moreover, the operators should be equipped with gloves and safety shoes.

3.2. Place and requirements for the installation

Before the arrival of the installers the user must arrange:

- any permits required by local regulations;
- appropriate ground.

3.3. Installation

Before starting the installation, if electrical equipment utilization is needed:

- make sure you do not work in wet areas;
- use only intact extension cords, according to the place of use;
- use shoes with rubber soles;

ATTENTION: It is necessary for the operators to use appropriate personal protective equipment such as safety shoes and gloves, in order to avoid injuries caused by the fall of the packaging or of components that it contains, perforation and cutting due to cutting or hanging parts

3.3.1. Package opening

Packaging must be opened only with scissors with rounded tips, using the best care not to cut the cloth of the article (Photo 1).

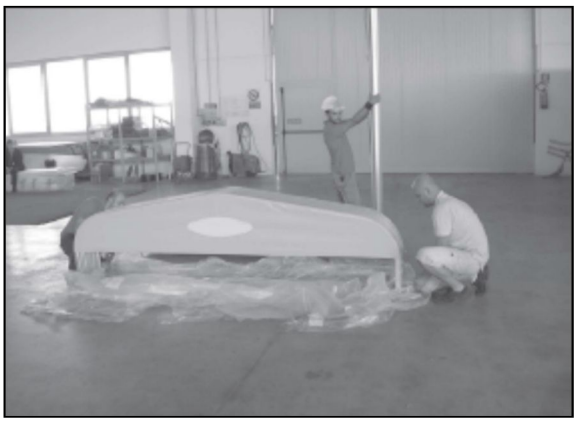

Photo 1

NOTE: The packaging material disposal is at user's charge, who will perform it in accordance with existing environmental norms.

3.3.2. Installation of the box

The box should be installed according to this instruction:

- Join the rails with their drilled joints (photo 2, 3, 4);

Photo 2

Photo 3

Photo 4

NOTE: Before being fixed, the rails should be positioned parellel and on a flat surface

- Open the heads A and B (photos 5, 6, 7 and 8)

Photo 5

TESTATA A

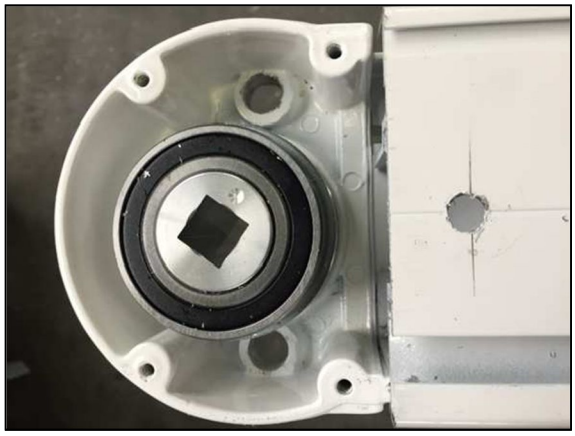

Photo 6

TESTATA A

Photo 7

TESTATA B

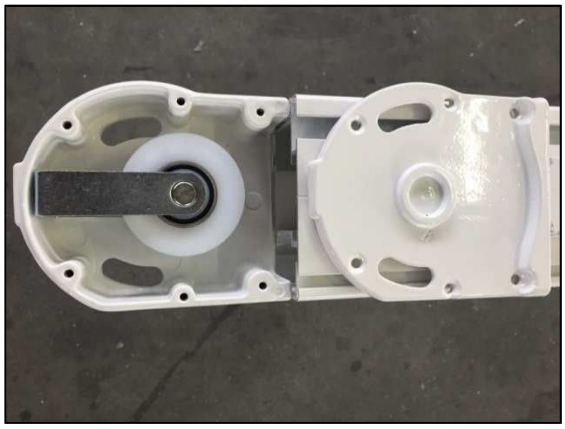

Photo 8

TESTATA B

- insert the belt in the rails; the two heads of the belt should exit on the same side (photo 9 and 10);

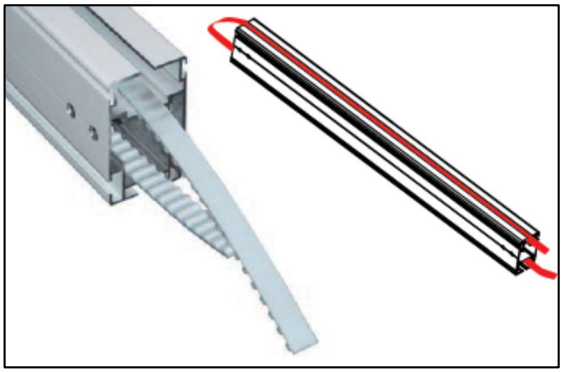

Photo 9

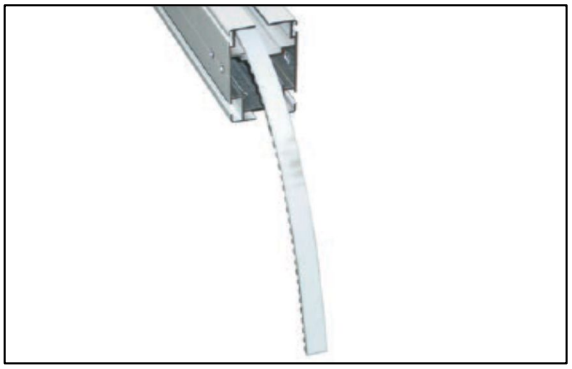

Photo 10

- insert the belt in the ferrule (photo 11 and 12);

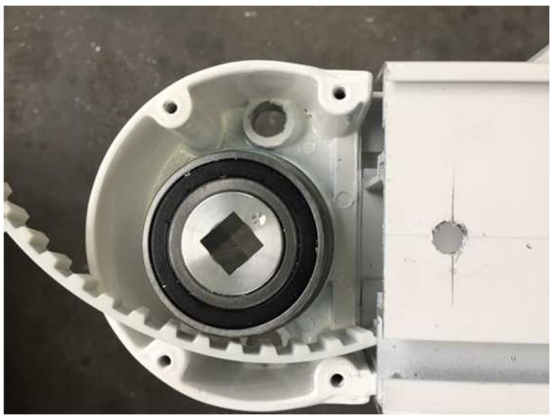

Photo 11

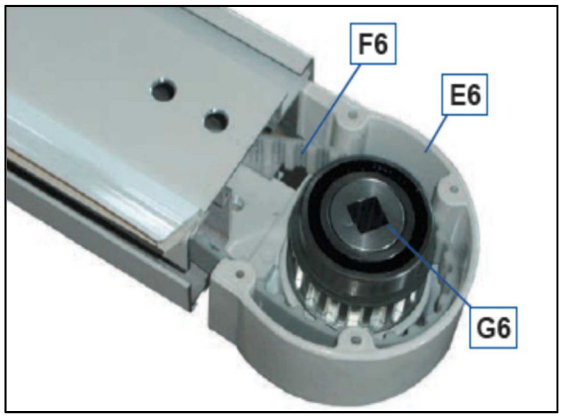

Photo 12

- insert the belt in the wheels (photo 13);

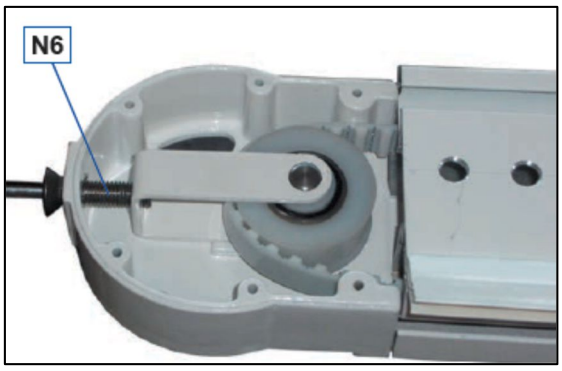

Photo 13

- join the belt under the carriage with a plate and then insert the carriage in the rail (photo 14,15, 16 and 17);

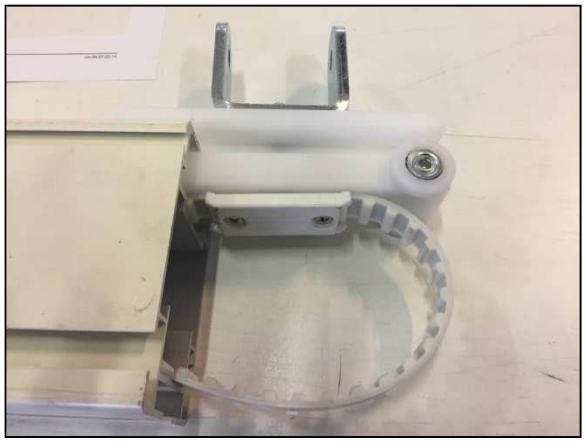

Photo 14

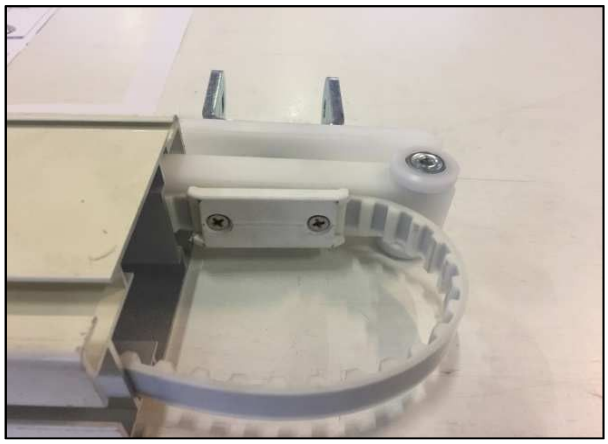

Photo 15

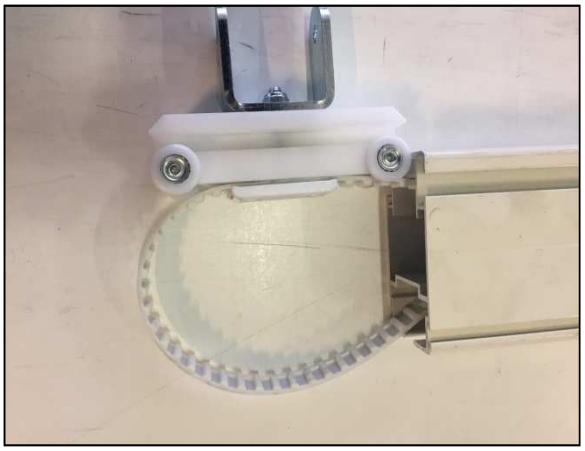

Photo 16

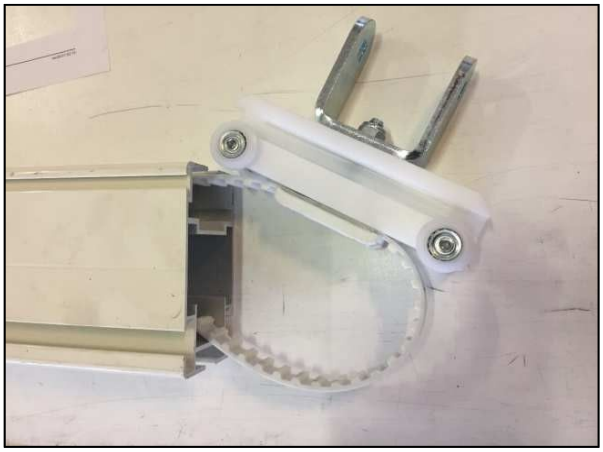

Photo 17

- move the belt on the wheel (photo 18,19);

Photo 18

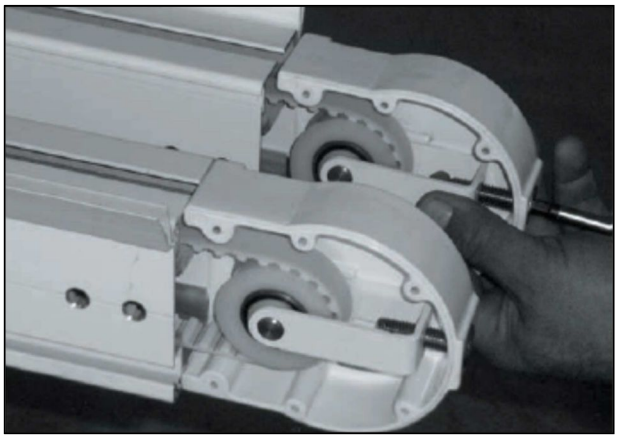

Photo 19

- close both heads A and B (photo 20,21 and 22);

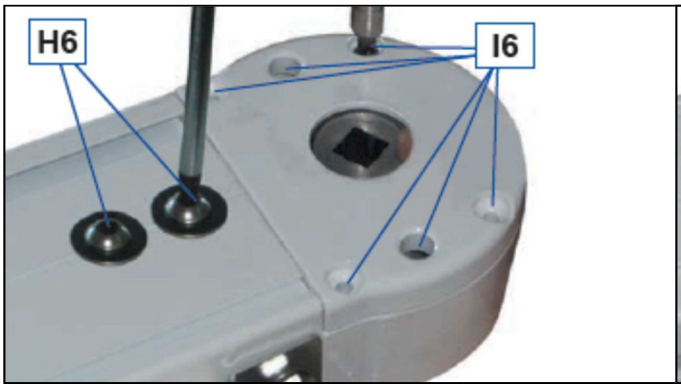

Photo 20

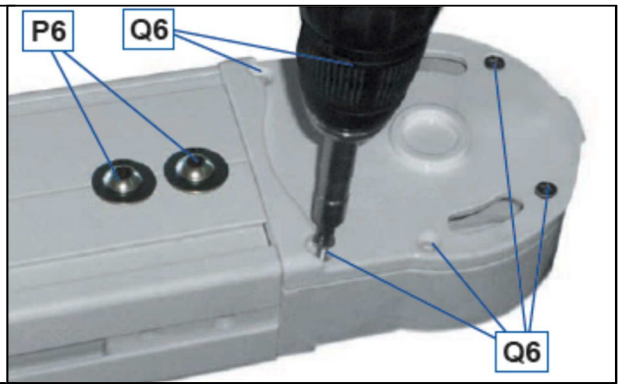

Photo 21

- stretch the belt using an allen key (6mm), operating on the hole on the head B (photo 22, 23);

Photo 22

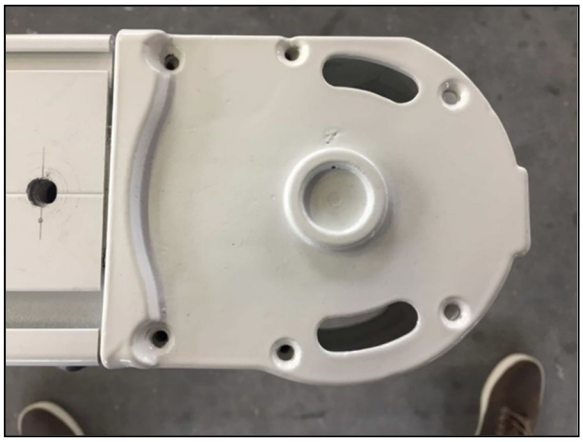

Photo 23

- proceed with the installation as you will see in the following photos (from 24 to 31);

Photo 24

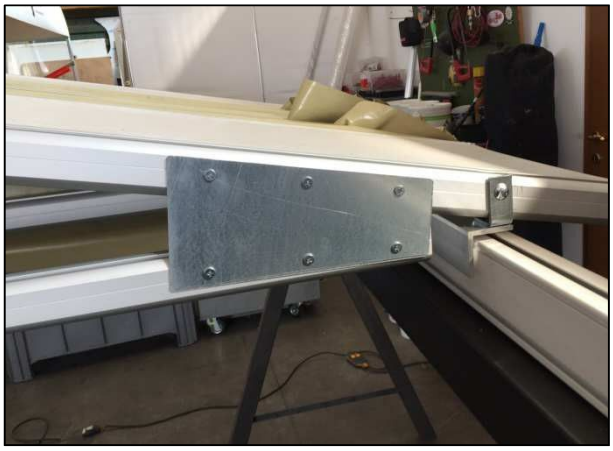

Photo 25

Photo 26

Photo 27

Photo 28

Photo 29

Photo 30

Photo 31

Finally, the structure can be fixed to the basement through appropriate anchorage systems.

ATTENTION: other installation ways which are not contained in this manual are not allowed, if not previously authorized by INTENDA S.r.l.

ATTENZIONE: the box must be fixed to the ground or to a wall. The installer must verify the ground type and conditions and choose the appropriate anchoring system, also considering the typical meteorological conditions of that particular place (strong wind,…).

ATTENZIONE: The Coprivasca must be installed at a minimum height of 240 cm from the ground.

4. General safety principles

ATTENTION

It is recommended to follow the safety requirements indicated on the structure and into the installation manual. Do not remove or modify the safety devices. The utilization of the product should be in accordance with the producer indications.

ATTENTION

The safety indications does not refers only to new products, but also to already used products.

WARNING

It is strictly recommended to follow the safety principles descripted in this installation manual, in order to prevent faults in the fuctioning of the product.

NOTE

It is strictly recommended to follow the maintenance and inspection programs as decribed in this manual.

It is useful to explain the correct meaning of some terms used in this manual:

“Dangerous areas”: any part of the box which can damage a person during handling of the structure.

“Exposed person”: any person who stands entirely or partially near a dangerous area of the box.

“Operator”: the person in charge of the handle and maintenance of the box.

The box should be only used by trained staff. These people should know the features of the product, and should be informed about the indications contained in this manual.

INSTALLATION AREA

The structure can be opened and closed by manual handling, by pushing it to the back. The handling operations should be always done on the ground. Any folding operation from a raised position it is strictly forbidden. The closure of the box should be always done by one person.

5. BOX UTILIZATION

Before using the Box you need to check that installation and ground fixation operations have been carried out properly.

ATTENTION: check that the structure is not damaged or deformed, and that no one of the component is broken.

5.1 Box mobile

- ***Opening of the structure:***

  - Pull the frame until the structure will be fully stretched
  - Move the tension bar placed between the crosses in horizontal position
  - Link the internal streching devices to the pegs with eyelet placed on the ground; then, put in tension the structure through the stretching device.
    - The structure should be tensioned at the same degree on both sides

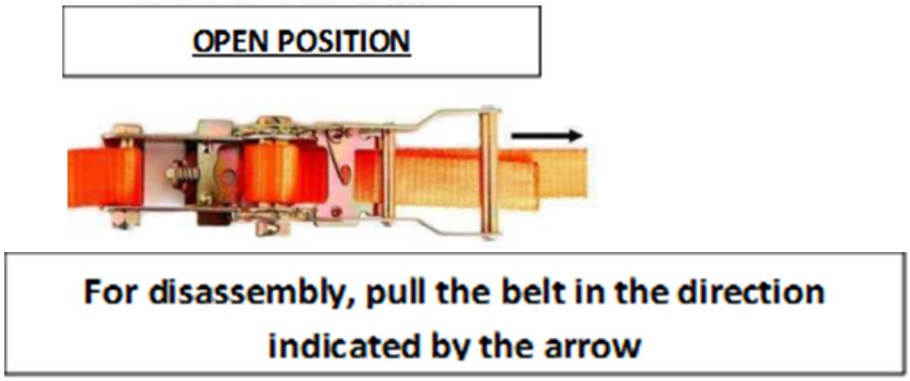

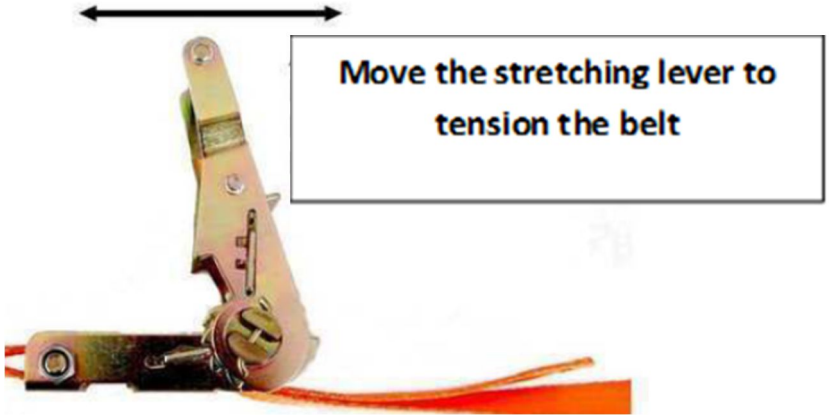

To avoid damages or structural instability, it will be necessary to close the structure on itself in case of important atmospherical events (rain, wind and snow).

- ***Closure of the structure:***

  - Unfasten the steel tension bar placed between the stell crosses;
  - Push the frame until its complete closure.

a. Not allowed uses

The product should be used for the purposes declared by the constructor.

In particular, the box must not be used:

- without PVC awnings
- with missing/broken safety and fixing devices
- in explosive atmosphere, or in place with potential fire hazard
- to contain materials with non-conforming measures, or materials which protude from the structure
- in adverse weather conditions; in these situations (strong wind, rain, snow), it is necessary to fold up the box
- in dangerous conditions, if the structure appears damaged or not functioning
- for unproper uses and/or by unskilled people
- for purposes which are contrary to the norms

- in case of severe maintenance deficiencies
- in case of unauthorized modifications of the product
- with total or partial non-compliance with the instructions

It is not possible to use the box in conditions of strong wind and/or snow.

In order to use the product during these adverse conditions, a written declarations by Intenda is needed.

Every modification of the product which changes the functionalities of the box and subsequently modify the risks, have not been authorized by the constructor.

These kind of changes, if not authorized by the constuctor, will cause the decay the warranty and will invalid the declaration of conformity of the product.

b. Residual Risks

According to its own knowledge of the product, the constructor declares that the following dangers may occur:

- Unusual vibrations of the structure
- Cutting, shearing, hitting of the operator by the mobile components during the handling of the box
- Slipping or trippling of the operator during the installation process
- Breaking of the restraining elements during unfavourable wind; in this case, there is the risk for every exposed person to get hit by the stucture
- Structural loss of stability, if the prescription previosly indicated will not be respected

6. Checks and maintenance

It is necessary to periodically check the general state of the structure, of the connections between the various components, of the and the PVC awnings.
The PVC awning can be washed with mild soap and then rinsed with water only.
After the cleaning, the PVC shall be well dried before fold, in order to avoid the creation of moulds,
The checks and maintenance frequency indicated below is to be considered as the minimun interval to grant efficiency, security and durability of the product of the product in normal use situations.
A constant supervision is reccomend, in order to act promptly in case of anomalies.
Ordinary maintenance, checks and lubrification operations must be done after the frame has been uninstalled.
ATTENTION: Every modification or manomission which has not been previosly authorized by the constructor, will cause the dacay of every responsibility of the constructor on the product conformity.
The constructor suggest to constantly control the box, making the scheduled checks, and prompt act in case of anomalies, unusual damages or breaks.

6.1. Ordinary Maintenance

CAUTION

The maintenance deadlines indicated here below are to be considered indicative, and refers to normal usage conditions. The product conditions can vary in relation to the type of usage, the usage frequecy and to the environmental features (presence of dust,..). In case of heavy duty conditions, the maintenance checks should be increased.

CAUTION

It is advisable to use the same kind of lubrificant during all the interventions. The greasing points must be cleaned accurately with compressed air before the lubrification; in this way, dust, mud and other foreign matters will not mix with the lubrificant.

Scrupulously perform the following operations:

EVERY DAY:

Before the use, visually inspect the box, paying particular attention to eventual breakages

Check the PVC awning integrity

EVERY WEEK:

Lubrificate the sliders (mobile version)

EVERY 6 MONTHS:

Check the general condition of the structure; if necessary, substitute the usured or damaged components.

Always use original spare parts.

Check all the screws

Check the ground-fixing systems.

EVERY 24 MONTHS:

General inspection of the constructor, with report of the most stressed components.

7. Disassembly

Disassembling operations are done backward to the assembly.

The eventual disposal of the box must be made in accordance with the existing environmental norms.

ATTENTION

Respect laws about use and disposal of the cleaning and handling products in force in the country where the structure is used. Respect also the manufacturer's provisions.

We evaluate a product life duration of 10 years. After this period of time, it is necessary to have a check from an Intenda S.r.l. technician, who will analyze the remaining life period.